ITEM	QTY	DESCRIPTION	PART NUMBER
1	1	BRKT, CARRIER LUBE MT	U5009354M
2	2	JET, STUB	U5009359P
3	1	M5 FLAT WASHER DIN125A SS	U6002506P_EXP
4	1	SCREW SHCS, M5x45 SS	U6003048P_EXP

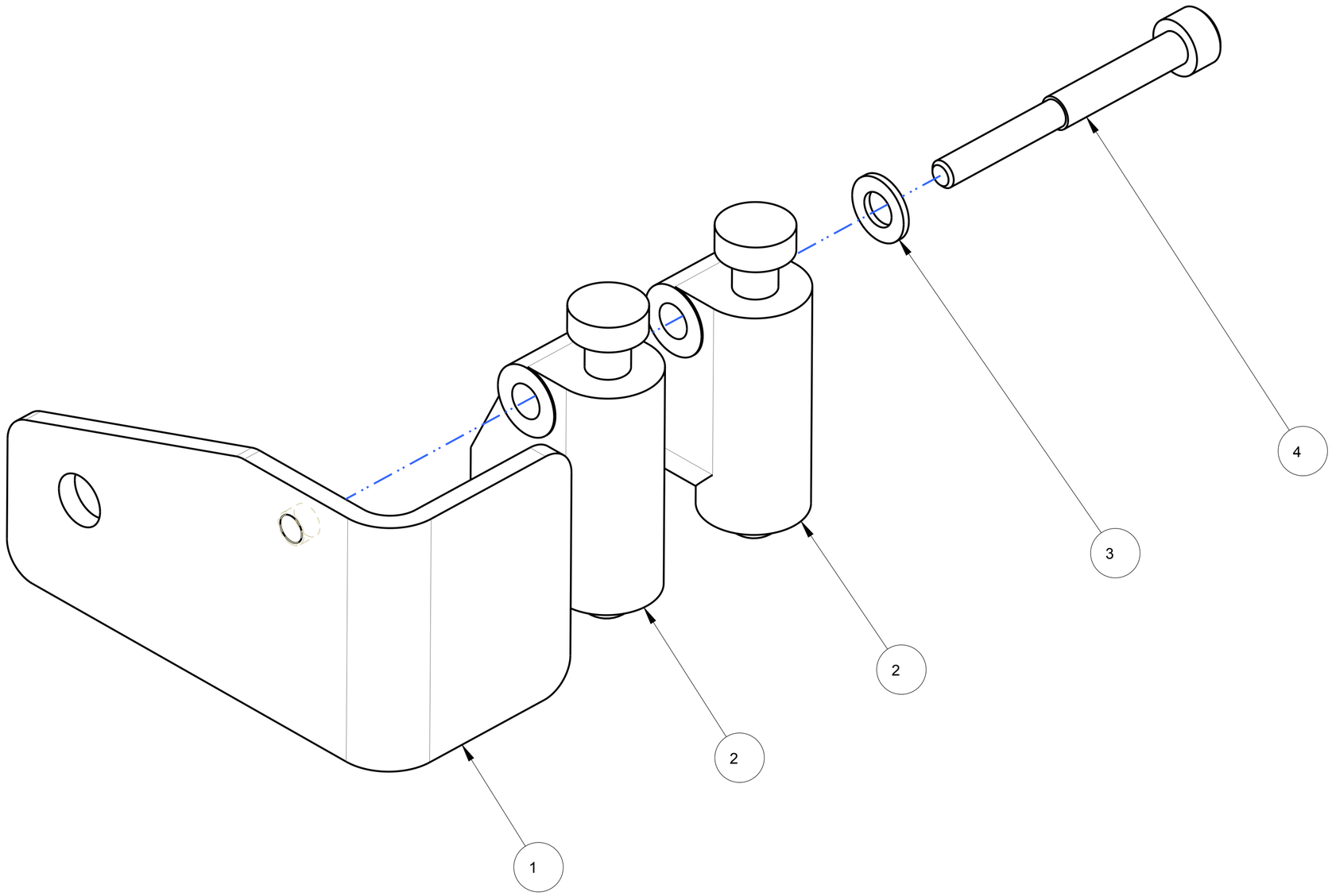

REV.	DESCRIPTION	BY / DATE	CHK'D / DATE
-	--		
-	--		
-	--		
-	--		
A	REMOVE SHEET 2 NO ECN REQUIRED	PNW 8-24-09	

NOTICE: THIS DRAWING AND ALL DATA, DESIGNS, STRUCTURES AND DESCRIPTIONS SHOWN THEREON ARE OUR PROPERTY. ALL PATENTABLE AND/OR COPYRIGHTABLE MATTER THEREON HAS BEEN PROTECTED BY APPLICATIONS FOR PATENT AND/OR COPYRIGHT. THIS DRAWING IS LOANED FOR A SPECIFIC PURPOSE AND MUST BE RETURNED ON DEMAND, AND MAY NOT BE COPIED, REPRODUCED, OR DUPLICATED IN WHOLE OR IN PART, WITHOUT OUR SPECIFIC AUTHORIZATION IN WRITING.

UNLESS OTHERWISE SPECIFIED: ALL DIMENSIONS MILLIMETER, DO NOT SCALE DRAWING

GENERAL TOLERANCE:
HOLE, SLOT H12
OTHERS js12

CONCENTRICITY ±0.02
PERPENDICULARITY ±0.02/CM
ANGULARITY ±0.25°

BREAK SHARP CORNERS
REMOVE ALL BURRS
FINISHED SURFACES 3.2 √(125)

METRIC

MATERIAL:

FINISH:

DRW BY: FDM	CHK'D :	ENGR. BY : MIDDLETON
DATE: 05-Jan-07	DATE :	DATE : 5JAN07

TITLE: ASSY, CARRIER LUBE

MeadWestvaco
Packaging Systems
Atlanta, Georgia
Deols, FRANCE

SCALE	MATERIAL CODE	DRW. SIZE	DRW. N°	REV	SHEETS
1/1		C	U5009353M	A	1/1